崇 昇 電 機
TRONSUN MOTOR

MODEL:RS-750PH/RS-755PH

输出功率：约8～250W
碳刷马达

典型应用：家用电器
电动玩具
电动工具

OUTPUT:APPROX 8～250W
Cabron-brush Motors

Typical Applications：Household Appliances
Electric Toys
Electrical Tools

1.OUTLINE DRAWING:

UNIT:MM

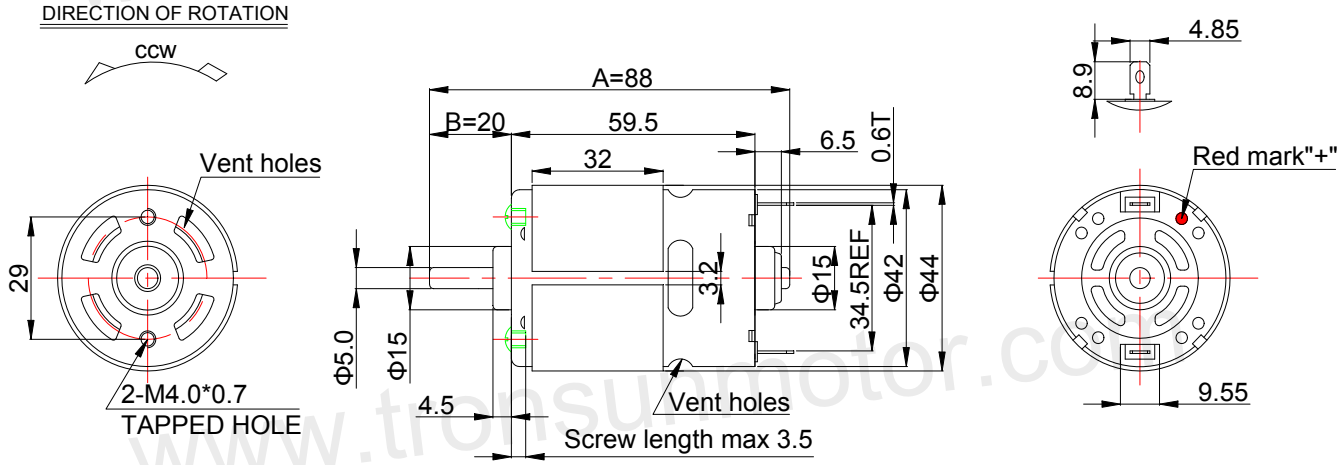

Customizable Parameters:
1. Length A and B
2. Electric Performance
3. Direction of Rotation

View:

WEIGHT：295g(Approx)

2.MOTOR PERFORMANCE :

MODEL	VOLTAGE		NO LOAD		AT MAXIMUM EFFICIENCY					STALL		
	OPERATING RANGE	NOMINAL	SPEED	CURRENT	SPEED	CURRENT	TORQUE		OUTPUT	TORQUE		CURRENT
		V	rpm	A	rpm	A	g.cm	mN.m	W	g.cm	mN.m	A
RS-750PH-4568R	5.0~13.0	12.0	7500	0.35	6683	2.80	349	34.25	23.92	3150	309.13	22.50
RS-755PH-2987R	5.0~25.0	24.0	5200	0.25	4393	1.36	473	46.42	21.31	3050	299.31	7.40
RS-755PH-5535R	5.0~19.0	18.0	11200	1.3	9496	7.30	910	89.30	88.63	5990	587.83	40.50
RS-755PH-7019R	5.0~24.0	24.0	25000	1.42	21600	9.70	738	72.42	163.50	5769	566.14	65.85

RS-750PH-4568R 12.0VDC 7500RPM

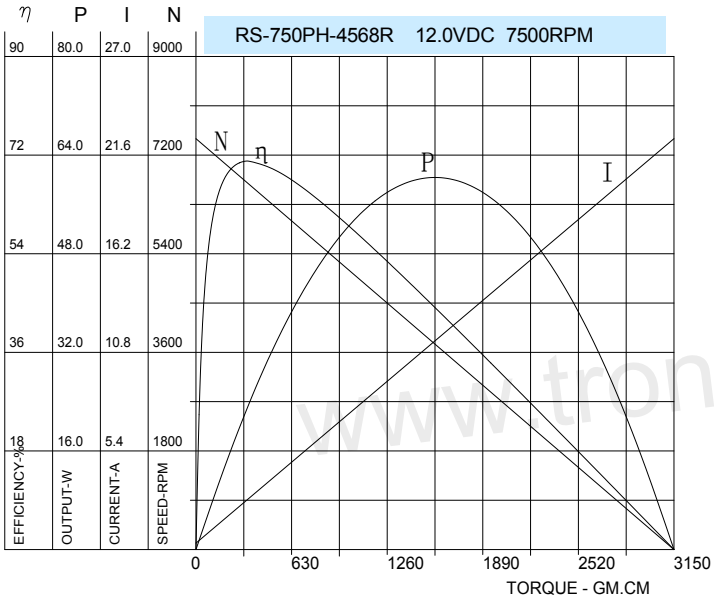
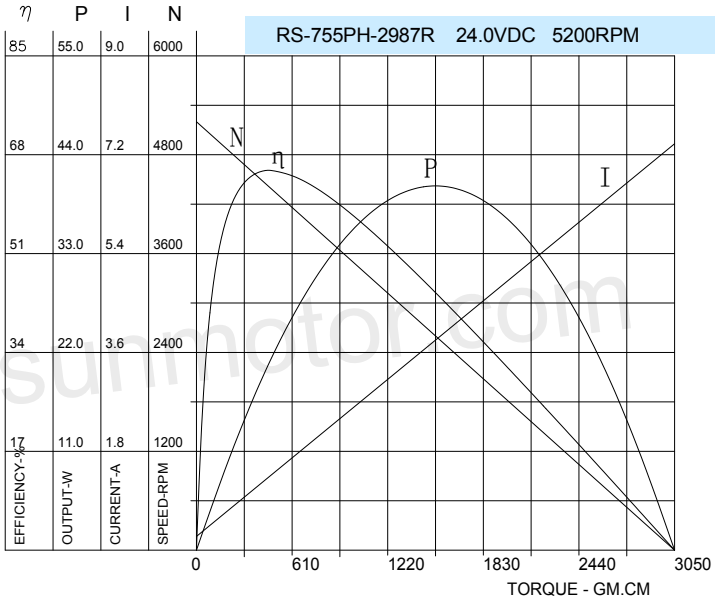
RS-755PH-2987R 24.0VDC 5200RPM